Catalina 22 Buyer's Guide

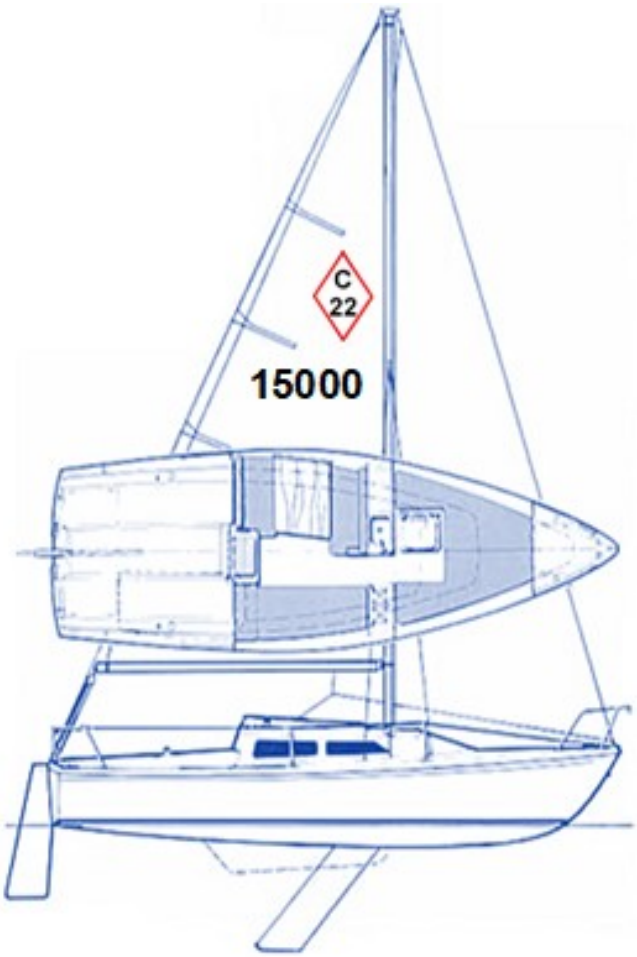

Prepared by Rich Fox, Editor
Catalina 22 National Sailing Association
www.catalina22.org

2026 Edition

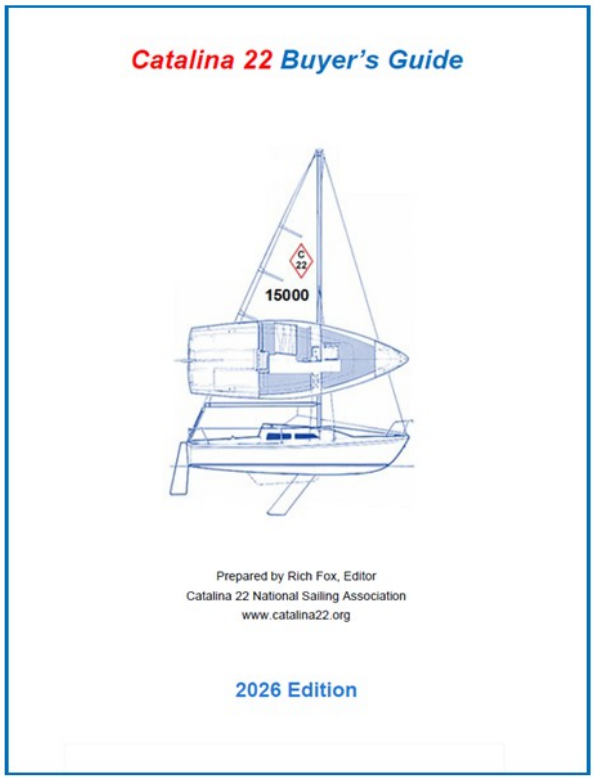

Content

3 A Brief History

4 Identifying the Four Models

5 Catalina 22: 1969 to 1985

6 Catalina 22 New Design: 1986 to 1994

7 Catalina 22 MK-II: 1995 to 2010

8 Catalina 22 Sport: 2004 to 2025.

9 Catalina 22 Capri / Catalina 22 Capri MK-II

10 What Do You Want To Do?

13 $5,000 is the Sweet Spot

14 Selecting the Right Boat

17 Which Keel?

18 Check Those Keel Bolts and Pivot Pins

19 Tips to Avoid a Mast Failure

21 Surveying a Catalina 22

24 Inspection Check List

34 How to Read a Catalina 22 HIN

37 Other Helpful Catalina 22 Publications

Copyright by the Catalina 22 National Sailing Association. The articles in this publication do not necessarily reflect the consensus of the Catalina 22 National Sailing Association and are the opinions of the individual author. The Catalina 22 National Sailing Association, its officers and members, are not liable or responsible in any way for their content or consequence.

Reproduction or distribution of this publication without the permission of the Catalina 22 National Sailing Association is prohibited.

All articles written by the Editor unless otherwise noted.

Editor - Rich Fox, email: c22mainbrace@yahoo.com

A Brief History

To breathe life into a piece of plywood and some fiberglass takes imagination to say the least, but that is exactly what happened. Frank Butler embarked on a project to build a small sailboat that was easily transportable and would accommodate a family at a reasonable price. What emerged was a boat that caught the eye of everyday folks who had never considered sailing and thus it became an overnight success. The Catalina 22 helped to launch the trailer-sailing market, and although many other designs have entered the market, it remains at the top of the trailer able sailboats.

In 1969 Frank designed the swing keel version of the Catalina 22 and launched to the market in 1970. In 1973 the pop-top was introduced as an option to give sailors covered standing headroom while the boat was moored. That same year the fin keel version was also introduced. With a user-friendly cockpit, simple but workable interior, simple rigging and low upkeep, the boats are a natural for the first time boat buyer, or a step between a sailing dinghy and a larger cruising or racing auxiliary. What happens in many cases, however, is that when owners move up to bigger boats, many will keep pass the Catalina 22 on to other family members or keep it to race in the extensive one-design circuit.

The Catalina 22 has defined the pocket-cruising trailer able class for the last 50-plus years. Any time two or more boats are on the same lake, sooner or later a race will ensue. When the boats are the same model, sailors can hone their racing skills and show each other how fast they are. Thus, began the Catalina 22 National Sailing Association. The Catalina 22 National Sailing Association remains one of the strongest in sailing, and, once involved, many sailors never leave

Since its introduction, the Catalina 22 has undergone several model changes. In 1985 (1986 model year), the Catalina 22 “New Design” was introduced with an updated cabin trunk and interior. It also featured an optional wing keel. In 1995 the Catalina 22 MK-II was introduced that featured 8 inches more beam at the deck, a longer cabin trunk, and no exterior teak. The New Design and MK-II models featured many new and improved design characteristics. The new boats were also heavier and moved further away from the one-design characteristics of the original Catalina 22. In 2004 (2005 model year), the Catalina 22 Sport was introduced in response to requests for a production boat that more accurately reflects the original dimensions and weight of the original (1970-1985) Catalina 22.

In October 2025, Catalina Yachts suspended production with no update about their future. In late 2026, C&T Composites acquired the molds and the legal rights to the Catalina Yachts brand and set out to build Catalina Yachts sailboats. As of 2025, there were 15814 Catalina 22s were built. No other production keel sailboat has ever come close to this

The Catalina 22 has introduced tens of thousands of people to the fun of sailing on a very reasonable budget. With so many Catalina 22s built, there are always plenty of boats available on the used boat market.

This ***Catalina 22 Buyer's Guide*** is available to help further educate you about the Catalina 22 with tips on what to look for or questions to ask when shopping around. You are also encouraged to join the Catalina 22 National Sailing Association (go to www.catalian22.org) where you will also find many other valuable resources such as the *Catalina 22 Technical Manual* and the *Catalina 22 Parts Catalog, Drawing and Measurements* publication.

Identifying the Four Models

For over 50 years the Catalina 22 has remained in continuous production with four models and over 15,810 hulls built and providing sailing fun for their owners. When buying a used Catalina 22 you will need to start by identifying which model of Catalina 22 that you want to purchase.

All four models of Catalina 22s share the following in common - mast (+/- 3 inches, based on model), boom, standing rigging (+/- a few inches), sail dimensions, rudder and keel (swing)

There is a little variation in mast and standing rigging due to cabin height differences between the four models.

The swing keel was standard in all four models. The fin keel was available as an option for the Original and New Design models. A few fin keels from the Capri 22 were installed on MK-II boats. The Sport was only available with a swing keel.

Nearly one-third of the Catalina 22s built are now over 50 years old. Most original Catalina 22s that are available on the used-boat market have enjoyed ownership by multiple owners, many of whom probably have made their own modifications to their beloved Catalina 22. The ***Catalina 22 Buyer's Guide*** cannot possibly account for all type of owner modifications. The information in this Guide is based on a base-boat—a boat built prior to any owner modifications.

Additional information about each model, including brochures, history and reviews, is available on the Association's website at www.catalina22.org.

Catalina 22 / 1969 to 1985

Hull #1 to 13142

This model was by far the most popular with over 13,000 hulls built from 1969-1985. Due to very high demand, the majority of the boats were built from 1969 to 1975, so expect to find a high number of boats that are at least 50 years old. In 1973, a pop-top option became available. Over 90 percent of the original boats built have the swing keels. A fin keel was also available. A wing keel was not an option for this model. These boats were mass-produced at a peak of 4 boats per day rolling of the production line in California. Today, the condition of these boats will vary widely from junk to very nicely restored by their owners. If buying an original Catalina 22 you should expect to spend some additional money to fixing leaky windows and chain plates, performing swing keel repair, replacing shrouds and other hardware. Don't be discouraged. Fortunately, a nice feature of these 50+ year old boats is the availability of parts from resources such as Catalina Direct and eBay.

Photograph by Katie McBride.

Photograph by Chuck Miles.

Catalina 22 New Design / 1986 to 1994

Hull #13143 to 15344 (est)

The Catalina 22 New Design was also a popular model with approximately 2,000 hulls built during an eight-year production run from 1986 to 1994.

With the introduction of the New Design there was a short list of the most significant changes:

- Slightly longer and higher cabin trunk
- Mast reduced by 3” (24’ 9”) to reflect higher cabin trunk
- Optional wing keel (2’ 6” draft) to reduce keel maintenance
- Dark tinted windows
- Forward hatch built into cabin trunk
- Gas tank locker isolated from cabin
- Galley moved forward
- Ice chest serves dual role as integrated interior step and cooler
- Built-in anchor-well in bow

The swing keel remained the most popular keel for this model, although a high number of wing keels were also built from 1988 to 1994. The wing keel version of this boat remains in high demand especially for cruising and day-sailing. Like the MK-II, a New Design with a wing keel usually does not stay on the market very long. The New Design is the heaviest Catalina 22 model and the least desirable model for racing. The boat was very well built.

Catalina 22 MK-II / 1995 to 2010

15345 to 15722 (est)

In 1995 the Catalina 22 MK-II was launched. It featured a wider beam and larger interior. Below are the most significant design characteristics of the MK-II:

- Longer cabin trunk and wider cockpit
- Fiberglass encased swing keel or wing keel
- Elimination of exterior teak, minimal interior teak
- Quarter settees in main cabin
- Lower v-berth providing more headroom in v-berth
- Mast reduced by 3” (24’ 9”) to reflect higher cabin trunk
- Optional wing keel (2’ 6” draft) to reduce keel maintenance
- Dark tinted windows and forward hatch built into cabin trunk
- Gas tank locker isolated from cabin
- Galley moved to starboard as a slide-out from below the cockpit
- Cockpit locker provides easy access to large storage area below

The MK-II design characteristics remained similar enough to the original Catalina 22 so it may participate in the Class-sanctioned regattas. A MK-II in excellent condition will demand top price. The MK-II is highly desired for cruising. A well-maintained MK-II does not stay on the market very long.

Photograph by Dora McGee.

Photograph by Don Boyko.

Catalina 22 *Sport* / 2004 to 2025

Hull # 15540 to 15814

Introduced in 2004 the Catalina 22 Sport was a return to the design characteristics of the original Catalina 22 to help encourage greater Catalina 22 one-design racing. The design features of the Catalina 22 Sport include:

- Longer cockpit
- Wider side decks
- Smaller cabin trunk
- Two full sized quarter births, no dinette
- Dual (inboard, outboard) tracks for jib cars
- No exterior teak
- Cockpit starboard locker for gas tank storage
- Cockpit locker provide easy access to large storage area below
- Fiberglass-encased swing keel
- Smaller stern pulpit
- Wider cockpit coaming

The Sport model features a larger cockpit and an entirely redesigned cabin trunk. The deck and cabin trunk looks like a Capri 22. However, the hull, mast, rigging, keel, rudder were built in accordance to the original Catalina 22 design.

Catalina 22 Capri / Catalina 22 Capri MK-II

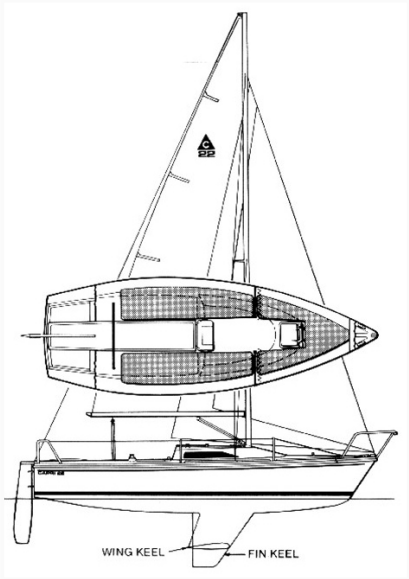

In 1984 Catalina Yachts introduced another 22-foot sailboat—the Capri 22. Although the Capri 22 is not in the same class as a Catalina 22, people looking at this boat often mistake it for a Catalina 22. The Capri 22 features a longer cockpit than the Catalina 22 and a faster hull shape for improved performance.

The Capri 22 MK-II was introduced sometime around 2000 and features a slightly wider hull.

The Capri 22 was offered with fin and wing keel options as well as a standard and tall rig options.

Approximately 1600 hulls were built during the 40+ year production run.

Photograph by Catalina Yachts.

What Do You Want To Do?

One of the best features of a Catalina 22 is that it is a family-friendly boat that can bring fun and adventure to sailing. Besides being a great boat for weekend family-fun sailing enjoyment, you can also take the Catalina 22 on a week-long cruise and compete in local and one-design racing.

Before deciding which Catalina 22 you may want to buy, you should first start the process by identifying what you want to do with the boat. For the purpose of this Guide, I have identified three categories:

1. Weekend / Day Sailing
2. Week-Long Cruising
3. Racing

Keep in mind that your interest may change over-time. Don't disappoint yourself by purchasing a Catalina 22 that doesn't meet your needs and expectations. There are plenty of Catalina 22s available in the market, so buy the best one possible.

Catalina 22 Original

Ratings

- ♦ Day-Sailing: Very Good
- ♦ Week-Long Cruising: Good
- ♦ Racing: Excellent

Most Catalina 22s are used for day-sailing. If you plan is to participate in a week-long cruise, the original Catalina 22 with a pop-top, swing keel and kick-up rudder is a good and popular choice. If you plan to race at your sailing club, a properly and well-equipped Catalina 22 in the hands of an experienced skipper will easily sail to its average 270 PHRF rating and should consistently bring home the trophies. For one-design racing at the national level, early hull numbers of less than 1000 are the racer's choice. Nearly all the boats that actively race in the Class are swing keels, not fin keels.

Catalina 22 New Design

Ratings

- ♦ Day-Sailing: Very Good / Excellent
- ♦ Week-Long Cruising: Very Good / Excellent
- ♦ Racing: OK

The New Design is a very good day-sailing and week-long cruising boat. It has a slightly larger interior cabin than the original Catalina 22, yet slightly smaller than the MK-II. This boat is well-built, solid and heavy. When the wind picks up, the New Design can take it. It has great cruising features such as pop-top and an anchor-well in bow. The wing keel version only draws 8 more inches than the swing keel in the up position. A well-equipped New Design can usually sail to a 270 PHRF rating in club racing, unless the wind is less than 5 mph, when its weight will make it slow. The New Design rarely competes in Class one-design races because it weighs at least 300 to 400 pounds more than the original model. In wind speeds above 15 mph, the boat will perform quite well, but you need to sail the New Design with a wing keel flat, else the boat will slide to leeward. The wing keel is slow to come out of a tack and pick-up speed and get into the groove. However, once in the groove. the wing keel can point as high as a swing keel.

Catalina 22 MK-II

Ratings

- ♦ Day-Sailing: Excellent
- ♦ Week-Long Cruising: Excellent
- ♦ Racing: Good

The Catalina 22 MK-II is the ultimate day-sailing and cruising boat. It features a wider cockpit, flat coaming for sitting, anchor locker built-in the bow, and is the model with the largest interior cabin. A MK-II with a wing keel is a highly desired cruising boat because it has a bigger boat feel with no keel maintenance. From a racing perspective, a MK-II with a swing keel can sail much better than a 270 PHRF rating, the wing keel would probably need a high rating of 273 or 276. If your plan is to race at the Club level, a properly prepared MK-II won't disappoint. For Class/one-design racing, the MK-II was never accepted due to its wider beam and slightly heavier weight (not much) than the original Catalina 22. In the 1996 National Championship Regatta, a MK-II finished in the top third of the Gold Fleet, beating some very well-known and experienced skippers. I give the MK-II a "Good" rating for racing because I have seen evidence that this boat can perform well on the race course. But it never got a fair chance to prove itself at the national level.

Catalina 22 *Sport*

Ratings

- ♦ Day-Sailing: Excellent
- ♦ Week-Long Cruising: OK
- ♦ Racing: Very Good

The Sport has the longest cockpit of all Catalina 22 models, so this makes it excellent for day-sailing. On the other-hand, the longer cockpit also means a smaller cabin, making the Sport OK for week-long cruising. The Sport also features the longest interior cushions of all the models. The Sport is a good racing boat. A well-equipped Sport will consistently beat a 270 PHRF rating. The continued migration of racers to find early hulls with the lightest weight has kept the Sport from proving its potential abilities. If you want to bring home a National Championship Trophy with a Sport, it is possible, but a fleet full of light weight original design boats will make it quite challenging. In 2017, a Sport finished second in the Gold Fleet at the National Championship Regatta, pointing out that the Sport can be quite competitive in the hands of a capable skipper and crew.

Summary

To summarize, if your interest is day-sailing, the MK-II and Sport are highest rated because of the longer cockpit. All models can easily provide lots of day-sailing/weekend sailing fun.

If your interest is week-long cruising, the MK-II is the best choice because of its larger interior cabin and large cockpit. The New Design is also a good choice and easier to find on the used boat market.

If your interest is racing at the national/one-design level and finishing in the top three spots of the Gold Fleet, then the original Catalina 22 is the preferred choice due to their low cost of acquisition and less weight. The Sport will be very competitive in one-design and local PHRF racing.

$5000 is the Sweet Spot

If you are planning to purchase a used Catalina 22 (Original or New Design), a price tag of approximately $5000 is the sweet spot.

At a $5,000 purchase price for an original Catalina 22 model, you should expect a properly equipped boat, trailer and outboard motor that is complete, operational, and in good sail-away condition. This would apply to an early 1970s model or to a 1980s New Design. A MK-II or Sport will carry a much higher price tag.

The more you deviate downward from $5000, the more likely you will need to purchase additional replacement items such as new sails ($1500+), standing rigging ($750+), running rigging ($500+), a new rudder ($1000+), trailer tires ($250), or possibly an outboard ($1000+). Or worse yet, a complete bottom job that could cost thousands of dollars.

You will also find that purchasing individual replacement parts is much more expensive than when parts are “wrapped” into the purchase price of the boat and trailer.

If you are not into restoring somebody’s problematic project boat, and if you are offered a “free” Catalina 22, then you should consider running away as quickly as possible. A free Catalina 22 could possibly cost you at least $4000 or on replacement parts. You will also invest a good part of your life for the next year or two restoring the boat. You may also be spending a lot of time on e-Bay and social media trying to find used parts at a low price just to keep from spending a higher price for new parts. A free Catalina 22 is often offered by somebody who was too lazy to maintain the boat, or started to restore the boat and realized the challenges, or was too cheap to have it hauled off to the dump.

Catalina 22s in reasonably good condition are available in the used-boat market. When they come up for sale they often move quickly. If you plan your budget with at least $5,000, then you will most likely find yourself on the water in no time in a Catalina 22 that you are happy with.

Selecting the Right Boat

By Winship Story

Originally printed in *MainBrace*, May 2004

Over a 15-year period I have owned a Hunter 25, Santana 20 and 23, a J24, Hobie 33 and a B- 25, but in 1989 I bought a 1977 MC scow in order to join the locally largest and most active “one design” fleet, and that’s when my sailboat racing education really began.

It did not take long to learn that there was much more to learn about one design racing than I thought, and that my boat was not really competitive except in winds under 10 mph. So, in 1994 I bought a 1988 model boat which I soon found was also not really up to the current standard, but at least I was getting better. In 1996 the budget was finally adjusted to purchase a new boat, and the latest sail Greg Fisher had designed. Finishes really improved but only after several years of experience and a competitive boat.

This story, in part illustrates how important it is to obtain the best equipment available, especially when racing in a one design fleet. In contrast to the Catalina 22, the MC is a very strong class where every measurement is tightly controlled. The last boat even had lead corrector weights to ring it up to the minimum 420 pounds.

A few years ago, I met my boat partner who wanted me to help him get up to speed on his newly acquired Melges 24. This alliance gained me a good friend and much frustration as we just couldn’t seem to get up to the speed of the class pros. Luckily, like the Catalina 22 class, most of the top competitors were very accessible and willing to share their knowledge. Our boat speed improved as we learned to tune the boat and Doug is now sailing his third Melges 24. Even so, we still can’t keep up with the top boats. The boat proved to be fast though, it won the Nationals in 2003. At least we know the boat is competitive.

I provide this background for two reasons. First, it is important in any class to seek out the most competitive equipment you can afford. Even in classes where there are very strict construction and measurement standards some boats are better than others. Second, no matter what your experience level, each class of boat has characteristics that are unique. Some knowledge is more transferable from boat to boat, but fortunately, most classes have people who are able and willing to give useful advice.

After Catalina 22 Fleet 58 joined the Lake Lanier Sailing Club, we saw how much fun they were having and as I was growing weary of struggling with a high-powered boat like the MC, Doug, and I decided to purchase a Catalina 22. Before buying a boat, we talked to local fleet members, in particular, Dennis Slaton was helpful and he helped us find a good boat to start with.

What we learned is that instead of purchasing the latest, high-tech wonder, the older Catalina 22s seemed to be the most competitive. Although there seemed to be several good fast boats up to the Mark-II, most boats under number 1000 were lighter than later boats.

While some folks might see this as a negative thing, we were most pleased at how inexpensive these older boats were even after all the work necessary to make them competitive. In 1996, my MC with trailer, sails, and cover cost about $10,000!. Our “new” old Catalina 22 #328 has cost us much less is spite of the many hours we have spent updating and making it look nice. And now that we hear about the new Catalina 22 Sport, it looks like we still have a good boat for much less than a new one.

In the past year when we have been associated with the Catalina 22 group we have been amazed at the amount of heated discussion regarding the competitive nature of the newer boats. This is so much the opposite of most racing classes! Usually, you must spend the high dollars to be competitive! New boat every two to three years, new sail inventory, even very expensive spares. In this class all you have to do is sell your new boat and find an old one! What an innovative concept!

Let’s face it (sorry Frank), the Catalina 22s were not constructed to the tightest of standards. Over the years it seems that the layup varied or at least the plywood coring varied from boat to boat. Total weight varied substantially as well as where the weight was located. Oh, and then there are the thin keels, thick keels, cast iron and fiberglass/ lead keels, wing and fixed; thin rudders, thick rudders and kick-up rudders; oval masts and flat-sided masts. Good grief!

Now we have the discussion (again) about boat weight. Well, sorry, if you want to race a competitive Catalina 22 then you have to do what every sailor in every other one design class has to do----find a competitive boat! It is the same in J22 and J24s, Sonars, Melges 24s, Thistles, Lightnings, Lasers, Snipes and MCs. And I have real news for you! Check out what the Star, Fin, 49er, Tornado, etc. Folks pay for a competitive boat. In those classes the boats are easy to find, just hard to pay for! Those fleet members are painfully aware of what they must do to get a competitive boat. They either shell out the $$$$$ for a new one or look high and low for a good used one.

So why are we any different?

While weight is a factor, it is not the only factor. Where the weight is located is very important. The boat should float with the stern just touching or slightly out of the water with the motor and rudder attached. You do not want a boat that drags its wide, heavy butt around the course. Also, I am amazed at how much crap people put on their boat and where they put it. In my short time in this class, I have seen boats racing with two big batteries, stereo systems, pump out heads, boxes of spares, huge fenders, huge anchors with hundreds of feet of rode, coolers filled with beer etc. Why not get rid of the unnecessary stuff and add another crew member? At least they can contribute to sailing the boat.

Class rules state that a minimum four horsepower motor weighing at least 40 pounds is required, and it must be left on the mount while racing. Obviously, a 9.8 horsepower electric start with six-gallon tank weighing in at 100+ pounds will not help your sailing performance. Kick-up rudders are heavier than most standard blades. There are thick and thin rudders and keels. Thin is usually better on both counts.

Non-pop-top models provide more cabin top space for controls and are likely to be a little stiffer and lighter. While fairing a keel is not too difficult, it is nice to find one without deep rusty pockmarks and a sloppy pivot hole. Flexing is very bad for performance. Are the bulkheads firmly attached? Is the deck pulling up at the fore and aft lowers? When you pull on the backstay do the shrouds get loose? A bow pulpit is required but lifelines, push-pit and heavy boarding ladders are not.

In other words, do your homework. By selecting a good boat to start with, you will have much less to do to get it up to speed. Unless you are able to find one already race prepared, it is likely there is still much to do to get it race ready.

Catalina 22 selection highlights:

- A light boat that floats high at stern.
- Standard blade rudder.
- No pop-top.
- 4 or 5 H. P. motor with small gas tank.
- Minimum extra accessories.

Which Keel?

The location where you may sail a Catalina 22 may be the number one deciding factor when deciding which Catalina 22 to purchase. If the water depth is shallow, then a wing keel may be the best choice. If the water depth is variable, the swing keel gives you the flexibility to easily raise the keel. If you sail in deep water, such as the Great Lakes, the fin keel may be a good choice.

If you plan to race your Catalina 22, then the swing keel is preferred. Over 90 percent of the Catalina 22s built have a swing keel. The fin keel will also perform quite well, but there are not that many around.

The swing keel on the original Catalina 22 will most likely be in poor condition and require some repair or restoration work. Nearly one-third of the Catalina 22 were built before 1975, so the boats and swing keel are well over 50 years old. If you can find a swing keel boat that was actively raced in the gold fleet of the Catalina 22 National Championship Regatta, then it is very likely that the keel will be in very good condition.

If you want to trailer your Catalina 22, the swing keel and wing keel versions are preferred for their ability to be easily launched and retrieved at the ramp. The fin keel may need to be hoisted to/from the trailer if the ramp is not deep enough. If you keep your boat in the water year-round, a fixed wing or fixed fin keel may be preferred as the swing keel has under-water hardware that will require periodic maintenance if left in the water.

The MK-II and Sport feature a fiber-glassed encased keel which greatly reduces maintenance.

Keel Type	Draft	Model Availability	PRO	CON
Swing	2’ 0” Up 5’ 0” Down	Original, New Design, MK-II, Sport	Retractable, Easy Trailering Preferred for Racing	Moving parts Regular maintenance
Wing	2’ 6”	New Design, MK-II	No maintenance	Slow coming out of a tack and can slide to leeward in strong breeze
Fin	3’ 6”	Original, New Design	Performance No maintenance	More difficult to trailer launch
Capri Fin	4’ 0”	MK-II (very few)	Performance No maintenance	Not class legal

Check Those Swing Keel Bolts and Pivot Pins

After purchasing a used Catalina 22, a Texas sailor found out the hard way the importance of checking the swing keel bolts that are used to secure the swing keel to the hull. When purchasing the Catalina 22, the Buyer was informed by the Seller about a swing keel bolt problem with one of the hangers, which was corrected. Unfortunately, there was a problem with another bolt that the Buyer was not aware of, and the swing keel dropped while sailing with three other people on board.

Catalina Direct recommends replacement of the swing keel bolts every two years. They also sell a Keel Fastener Kit that is available less than $10.

Photograph by Catalina Direct.

Also beware of a Catalina 22 swing keel model with a severely worn-out pivot pin. The pivot pin shown below was from a Catalina 22 that was kept at a dock in a cove with light wave movement. The swing keel was kept in the up position.

Catalina Direct sells a Keel Pivot Pin that fits all Catalina 22s for less than $25, plus shipping.

Photograph by Catalina Direct.

Here are tips to help you avoid a mast failure on your Catalina 22.

1. Replace Cast Aluminum Spreader Bracket - if your Catalina 22 has a round mast with an cast aluminum spreader bracket, promptly replace it. This bracket has a proven history of cracking, leading to mast failure. It's not a matter if an aluminum spreader bracket will crack, but when! Replace it with a stainless steel spreader bracket available from Catalina Direct. You will also need to replace the spreaders and the 1/8" diameter forward-lower shrouds.

2. Missing Compression Sleeve - if you do have an older mast, check to see if there is a compression sleeve and a through bolt. If you do not wish to replace the older aluminum brackets, a compression sleeve may be installed by removing the spreaders, drilling a 5/16" hole through the bracket, then installing a 5/16" bolt through the mast with a compression sleeve inside. Position the compression sleeve inside the mast by taping this sleeve to the end of a PVC pipe to hold it in place. Then after the bolt is secured, the pipe can be pulled out, breaking the tape.

3. Unsecured Adjustable Backstay - if you have an adjustable backstay, be sure to put a knot in the line to prevent the mast from unexpectedly going too far forward in the event the control line is accidentally tripped loose while sailing downwind.

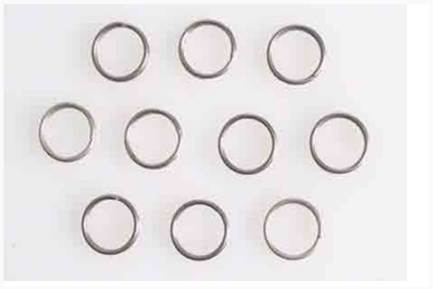

4. Symmetrical Cotter Rings - a round cotter ring may be used to secure turnbuckles to the chain plate / eye bolts on the deck of the Catalina 22. If the cotter ring comes out and the turnbuckle and the associated shroud become lose, then mast failure is likely. Use symmetrical cotter rings that are shaped with no inside curve. They are more difficult to remove and less likely to snag on sheets and accidentally get pull out. If you use cotter pins, beware they could snag on sheets or sails. Whether you use cotter rings or cotter pins, before you go out sailing, take a quick look to make sure they are properly in-place.

5. High Wind Speed - when the wind speed goes above 15 mph (approximately), make sure your lower and upper shrouds are tight to prevent the mast from excessive pumping that could cause damage of the spreader bracket, directly leading to mast failure.

6. Damaged Shroud Strands - inspect them regularly for broken strands. Replace them every seven to ten years, more often if you sail in salt water. A few broken strands on a shroud in high wind could quickly turn into a mast failure scenario.

7. Cracked Mast Head - when the mast is down, periodically check the mast head for any cracks. Promptly replace if any cracks are found.

8. Missing Mast Step Bolt Nut - periodically check to make sure the mat step bolt is secured on the mast step, and that the wing nut or nut has not come off.

9. Overhanging Trees and Wires - if you are launching or retrieving your Catalina 22 at a new ramp, look up! Not all ramps are designed for use by sailboats and tree limbs and wiring may clip the top of your mast and unexpectedly bring it down.

10. Properly Tuned - last, but not least, a properly tuned mast is less likely to fail than a mast where tuning has been neglected. A properly tuned mast is less likely to “pump” in higher wind and less likely to fail near or at the spreader bracket attachment. Multiple Catalina 22 Tuning Guides are available to C22NSA members on the www.catalina22.org website.

11. Spreader Tips—make sure that your upper shroud is properly installed at the tip of each spreader. Whether you are using seizing, safety wire, or a cotter pin, you need to make sure your upper shrouds cannot pop-out of the spreader. If the upper shroud disengages from the spreader, mast failure will occur.

Surveying a Catalina 22

By Dick King
Technical Editor of the Catalina 22 National Sailing Association during the 1980s and 1990s.

Originally printed in *Mainsheet,* May 1994

You have fallen in love with your dream boat (a Catalina 22, that is). You have heard an owner's loving words or have seen them in your favorite sailing magazine. You may have seen one sitting lonely and forgotten and felt sorry for her. You have picked an ideal model of a sailboat, but how do you know that a particular Catalina 22 is the one you want to buy?

It depends upon her current condition. If she is new or has been well cared for, price is the main driver in your buying decision. If she is in need of some tender loving care, the price might be right, but it also depends on your ability to deal with anything that might be wrong with her. Some folks are more handier than others. If the boat has rigging or hull problems, you may need access to marine repair facilities or at least to someone who sells repair items.

What follows is a list of some things to look for outside of the boat, when deciding whether to buy this particular boat. This may also be used as a maintenance checklist for owners.

The bow-eye should be made of good quality stainless steel. A U-bolt is stronger than an eye bolt but requires an additional hole in the stem. Make sure the bow eye is tight and the hole in the stem is sealed.

The Tack Fitting takes the load of the forestay and the genoa halyard. The older fittings have the forestay hole forward of the bolts that attach the fitting to the bow. The fitting may be bent from the forestay loads. The factory now offers a fitting that has a reinforcing tang that is bolted to the stem to take the load and prevent bending.

Take a close look at the lower ends of the standing rigging (shrouds and stays). With the exception of the fore- stay, all the rigging is attached to the deck by eye-bolts. The earlier models have 3/8-inch bolts, while the newer ones are 1/2 inch. Check the alignment of the heads of the bolts. If you sight across the head of the eye bolt toward the center of the boat, you should be looking in the direction of the mast. Check the shackles and the turnbuckles. They can have either cotter pins or rings, though rings are easier to remove, and are much kinder to skin, sails and sheets. Turnbuckle screws should be straight. There are many types of turnbuckles, each with their own locking mechanisms. If stop/jam nuts are used, make sure they are stainless. Some of the older boats have plastic stop nuts which become brittle

after long exposure to sunlight. Make sure the stop nuts and the bodies of the turn- buckles turn easily on their screws. Examine the thimbles in the lower ends of the wires to ensure that they are not bent or cracked. Look for cracks and irregular pressing on the nicro-press sleeves on the wire ends. All wire ends should have at least two sleeves.

If the mast is down, make the same check of the upper ends of the standing rigging. Use a soft, folded-up cloth and run it the full length of each wire to check for broken strands.

Especially check the part of the upper shrouds where they rest on the ends of the spreaders. Check the spreaders and their brackets for cracks. If the brackets are aluminum, check all four lower shroud attachment points for signs of wear or cracks. A note on rigging - if it is over five years old, think very seriously about replacing it. It is a lot less expensive than replacing a mast and mainsail.

There are two types of mast steps. The old design step is made of aluminum and has slots in the aft end. A pin in the bottom of the mast is fitted into the slots as the mast is being raised. The bad news is that during mast lowering, the pin can lever against the slot and bend, crack, or break off the upper side of the slots. The new design is a stainless step with a vertical slot. The mast pin is replaced with a bolt, which is inserted through the mast and step prior to raising the mast. The slot allows the end of the mast to move upward as the mast is lowered. The bad news is that galvanic corrosion can eat at the end of the mast if it is left in contact with the step for an extended period. If the boat has lifelines, look for cracks in the stanchion bases or bends in the bases or tubing. Look for dried, cracked, or missing bedding compound at the bases. Water leaks into the deck and can cause the plywood between the deck and the inner liner to rot. Check the life lines for broken strands and the terminations for cracks and splits.

At the transom, examine the tiller, rudder, pintles and gudgeons. Check the tiller for splits, especially at the aft end. The stainless tiller straps have a tendency to flex when experiencing weather helm. This can lead to cracks in the area between the end of the tiller and the forward edge of the rudder head. The kick-up rudder has a stainless lock-down/pivot bolt. The locking mechanism is aluminum. Galvanic corrosion can cause the locking function to malfunction. The loose rudder blade can work from side to side or kick up slightly, causing large bending loads on the rudder blade, where it exits the rudder housing. Check for cracks in the blade and bent sides on the housing. In some cases, the loads are enough to break the screw heads off the sides of the rudder head. Check the fit of the pintles and gudgeons. They should fit tightly but should turn smoothly. If the boat has a fixed rudder, check the pintles for bent pins or cracked welds. Check that the gudgeons are mounted tightly to the transom and are properly bedded. Check the traveler bar and the slider mechanism.

Except on the new models where the traveler bar is part of the stern pulpit, it consists of a U-shaped bar through-bolted into the transom. The traveler should be tight down against the fender washers on each end. It should not rock fore and aft. If there is enough space inside the transom, a long extension and a thin wall deep socket can be used to tighten the nuts on the ends of the bar. Otherwise, access holes must be cut in the inner face of the transom. (The same check and fix can be applied to the backstay eye bolt. Depending on the year of the boat, the lower mainsheet block is attached to a slide or a car on the traveler bar. The older models with the slide also have rings with thumb screws to limit the travel of the slide. Check for bent or stripped screws. Check for worn or missing sheaves on the car.

Check the motor mount. Is it functional? Is it large and sturdy enough for the weight of the outboard you plan to use? Is it firmly mounted and properly bedded to the transom? Is it mounted for a long shaft or a short shaft 0/B? (6-inch difference). When the motor is down, the mounting board should not drag in the water.

The Catalina 22 has one of three types of keels - swing, wing, or fin. If you plan to sail in shoal waters or your mooring or dock is in less than 3.5 feet of water, a swing keel is for you. If the boat has a swing keel, check for wear in the pivot pin area. If the boat is in the water, rock it from side to side and listen for a muffled "thunk, thunk." If it is on the trailer and the keel is not resting on the keel support, push on the side of the keel near the aft end. It should not swing from side to side.

One final thought on buying, spend a little extra and hire a marine surveyor.

Inspection Check List

Hull

What to look for:

Look for color distortion of the hull that may indicate possible repair area.

Hull-to-Deck Joint
- Walk around and look for damage from impact or collisions.
- Small spider cracks in gelcoat are common and usually OK.
- Check bow for damage.

Gelcoat
- Walk around and look for damage deeper than the gelcoat that may indicate possible repair work.

Rub Rail and Rub Rail Insert
- Dents indicate impact with dock or other boats.
- Vinyl insert missing or hanging loose.
- This area is a common source of water intrusion across all models.

Blisters
- Common problem for Catalina 22s built during the 1980s.
- They appear as small bubbles below the water line.
- Blisters are a significant work effort to grind out, dry out, and fill in the void.

Cracks in Hull
- In bow area may indicate a prior collision.
- Near swing keel area, below water line may be a sign of further damage in the keel trunk.
- Damaged lock-down bolt (keel trunk).
- Near trailer bunk boards or trailer rollers.

Bow Eye
- Missing or damage in bow eye area.

Thru-Hull
- Installed transducer for knot-meter or depth sounder may be source of water intrusion.

Scuppers (New Design, MK-II, Sport)

- Check if damaged or missing - a possible leak source.
- Scuppers on an original Catalina 22 is most likely installed by a prior owner. Not factory installed.

Deck

What to look for:

Foredeck and Mast Base Area

- If soft, then this is a sign of water intrusion between the deck and the interior liner. You may want to consider walking away.
- This is a very common problem on a the original Catalina 22 and is a very significant repair effort.

Forward Hatch

- A source of water intrusion on original Catalina 22 that causes the foredeck to be soft.
- On New Design and MK-II look for cracks.

Bridge Deck (between cockpit and cabin entrance)

- On a swing keel look for two bolts that hold the swing keel winch then look for cracks and damage in this area.
- This is a major repair effort as the bridge deck provides support for the swing keel winch.

Paperwork

Look at registration and title.

Laws vary - check local and state laws and understand what paperwork is required before you buy.

- If Seller's paperwork is not in their name, or is incomplete, then move on.
- Buying a Catalina 22 or trailer from out-of-state often brings the most challenges when working with your state's bureau of motor vehicle. If paper work is not in order and complete, then you may find yourself spending a lot more time chasing down paperwork with the previous owner.
- Check if you can buy insurance on the boat and trailer. Some insurance companies no longer offer coverage on old Catalina 22s.

Keel

What to look for:

Swing Keel

- Expect to find a high amount of rust on an Original or New Design model; the older the boat, the more likely the swing keel is in bad shape.
- If missing or not installed, then walk away.
- You should find four bolts securing the keel hanger casting to the hull. If they have never been replaced, the bolts may be difficult to remove, or could break during the removal process.

Swing Keel Housing

- Inspect from inside the boat for damage, cracks, as this may be a source of water intrusion.

Swing Keel Winch

- Looks old? Replace with a new swing keel winch.

Swing Keel Cable

- Look for broken strands - always a good idea to replace.
- Replace the turning ball.

Swing Keel Cable Hose

- Try to twist it, should be firm - always a good idea to replace.
- Should have two clamps installed in opposite directions.

Swing Keel Hanger Casting

- Should have two bolts installed in each.
- Should be flat along the hull.

Swing Keel Eye Bolt

- Missing, loose or damaged will require repair before launching.

Swing Keel Pivot Pin

- Plan to replace - inexpensive.
- It is common for the pivot pin to wear down over a long period of time.

Wing or Fin Keel

- Visible gap between hull-to-keel indicates a repair will be needed.

Rudder

What to look for:

Rudder

- Expect to find cracks in the gelcoat with an aging rudder.
- Missing? This can be an expensive replacement.
- Verify it is a Catalina 22 rudder and not a home-made replacement.
- Water intrusion is possible in a blade rudder and over time this may lead to the rudder cracking in half while sailing.

Pintles

- Stains around the pintles indicates water has likely penetrated the inside of rudder and the integrity of the rudder is weakened.

Gudgeons

- Original and New Design have two-piece gudgeons where the inner ring may rust and break.
- Upgrade to a one-piece gudgeon is recommended.

Tiller & Tiller Straps

- If missing, replacements can be easily found.
- A cracked tiller should be replace.
- Tiller straps—should not be bent. Upgrade to the heavy duty tiller straps.

Cockpit

Cockpit Floor

- Look for deep cracks that could be a sign of a future fiberglass repair effort.

Interior

What to look for:

Bulkhead

- If wet or rotted, then the upper shroud chain-plate may be leaking. Not only will the bulkhead require replacing, water could have already penetrated the deck near the chain-plates.
- The New Design model is notorious for having a problem in this area. The chain-plate for the upper shrouds is poorly designed and water intrusion is very common.

Windows

- Look for stains around window - a sign of leakage.
- It is very common for the windows on an original Catalina 22 to require replacement due to leaking.

Bilge

- Should be dry—water or water stains are sign of water intrusion.
- If wing or fin keel, then the hull-to-keel joint may be source of water intrusion.
- If swing keel, keel cable hose may be leaking, or keel trunk is cracked, or lock-down bolt area may be damaged.

Electrical Panel

- Lights not working or bad wiring/connection.

Sources of Water Intrusion (see water or stains):

- Windows (original C22)
- Chain plates
- Thru-hulls (sink drain, cockpit drain)
- Lifeline stanchions
- Hand rails—cabin top
- Deck light above v-berth (optional)
- Forward hatch on foredeck (original C22)
- Gas vent (original C22)
- Loose gudgeons
- Swing keel cable hose
- Anchor lock drain (New Design)
- Rub rail at hull/deck joint

- Crack in hull, including keel trunk
- Damaged lock-down bolt (keel trunk)
- Loose or improperly bedded hardware, including bow pulpit, stern pulpit, motor mount, swim ladder, winches, cleats, electronics, compass, other owner-installed accessories.

Cushions

- Any missing cushions? All inserts included?
- Soiled and torn cushions are expected in a 50+ year old boat, or even a boat half that age.

New interior cushions for all four Catalina 22 models are available from Catalina Yachts Store or Catalina Direct. Many owners with the right tools and skills may decide to make their own cushions.

Foam

- Some Catalina 22s have foam inside the storage areas. The foam can smell, hold water, and is very difficult and time-consuming to remove.

Toilet

- Some Catalina 22s have a permanent toilet installed that relies on a holding tank. For some owners this may be problematic.

Mast, Boom and Rigging

What to look for:

Mast

- If round mast, look for cast aluminum alloy spreader bracket—this should be replaced.
- The round mast has demonstrated a higher failure rate and was replaced with the flat-sided mast in the late 1970s.
- Dents or gouges may indicate the mast has been dropped.
- Inspect masthead for cracks if mast is down.
- If the chain-plates for the upper shrouds are located forward of the mast, then re-work of mast base or the chain plate of upper shroud may be required or desired.
- Inspect the two bolt-holes at bottom of mast for damage, cracks.
- Look for cracks where mast-raising device is inserted into lower hole (on flat--sided mast only).

Boom

- Look for damage in the goose neck.

Standing Rigging

- Ask when last replaced.
- Should be no broken strands or wires.
- Look for corrosion where wire connects to swagged eye terminals.

Running Rigging

- Standard equipment should include two halyards, mainsheet, traveler.
- Optional equipment may include boom-vang, adjustable back-stay and outhaul.

Chain Plates

- Check if loose, look for corrosion.
- Look inside for water stains on bulkhead or water drops on underside of deck, or water accumulation/stains near settee.
- Chain plate leakage is very common.

Sometime around 1977 Catalina Yachts introduced a flat-sided mast as standard on all new Catalina 22 sailboats. The oval mast was discontinued.

Sails

What to look for:

- Should include main, Genoa 150% or 135% or 110%.
- Torn or has holes - will require repair.
- Loose stitching or grommets - will require repair.
- Stains or mildew - will require cleaning.
- Most main sails will have slugs (approximately ten) and battens (four) should be present. Upper two battens may be partial or full.
- Some main sails do not have slugs and have an embedded rope along the luff that is inserted into the mast.
- Look for excessive wear in Genoa where it may touch the spreader.
- Ask if sail bag, sail cover are included.
- Sail cover torn or missing snaps or grommets - may require repair.
- Ask if head sail is hanked-on or part of a roller furler.
- Roller furler—broken shroud strands at top will need to be replaced. Roller furlers can be a source of frustration with some owners.
- If the owner of an Original Catalina 22 or Catalina 22 New Design says the sails are original, you are looking at a 30 to 50 year old sail that are most likely pretty worthless. You will be spending money to replace them.

When inspecting sails, look to see if they are rolled, folded, or simply stashed in the sail bag or not in a bag at all. If not properly rolled or folded, then this may suggest the owner has not properly maintained the sails and possibly neglected care for other parts of the Catalina 22.

Electrical

What to look for in the condition of the electrical system:

- Interior and exterior lights should work.
- Battery is optional.
- Rats nest of wiring may be a fire hazard.
- Beware of owners who have removed wiring.

Outboard Motor

What to look for:

- A wood board on the motor mount may need to be replaced.
- Long-shaft (20” +) is usually preferred. A 15” shaft will come out of the water when somebody is on the foredeck. A 25” shaft may drag in the water while sailing.
- A four to six horsepower outboard motor is most common. More horsepower may be desired in coastal waterways, but will rarely push a Catalina 22 much beyond its hull speed.
- Ask for maintenance history or receipts.
- Ask if oil and the lower unit were lubed on an annual basis.
- Steady stream of water should be visible.
- Portable outboard motors by Mercury, Honda and Tohatsu are most common on a Catalina 22.
- Confirm the motor mount on the transom of the Catalina 22 is firm and is in good working condition.

Trailer

What to look for in the condition of the trailer:

It is usually a lot easier to buy or sell a Catalina 22 that has a trailer. If you buy a Catalina 22 without a trailer, and decide to sell it in the future, then you will be limiting the number of potential prospective buyers to those at the local marina or club.

Tires
- Check for flat tire or tire rot, age should be less than five years old.
- If cracks are visible, then time to replace the tire.

Lights
- All lights should be working, no broken or missing lamps.

Bunk Boards
- Check if loose.
- Should be carpeted.

Bearings
- Ask about the last time they were replaced and how often they were replaced.
- Jack up the wheel, rotate it and see if it squeals.

Brakes

- Check your state laws for trailer brake requirements.
- The total weight of an original Catalina 22 or Catalina 22 Sport and trailer is likely to be under 3,500 pounds. However, the total weight of a Catalina 22 New Design or Catalina 22 MK-II and trailer is likely to exceed 3,500 pounds and could exceed 4,000 pounds.

Axle

- A single-axle trailer is most common. A dual-axle trailer is a real plus.

Tongue Extension

- If it has one, is it operable or stuck?
- Highly desired for a wing keel or fin keel model.

Mast Raising

- Is a mast-crutch included.

Undersized Trailer

- Avoid a trailer that is undersized. The axle for a swing keel trailer should be aligned with the rear window when viewed from the side.

A galvanized trailer is preferred for salt water use.

Swing Keel: If the Catalina 22 swing keel is sitting on the trailer, is there a gap of several inches between the trailing edge of the swing keel and the hull? You do not want the bottom of the hull and all that weight sitting on the trailing edge of the swing keel.

Wing Keel: If the Catalina 22 wing keel is sitting on the trailer, is the wing keel trailer resting on the trailer, or suspended? The wing keel should be sitting on trailer.

A new, properly designed swing keel Catalina 22 trailer will cost approximately $4500 (in 2026). A used trailer in good condition may be purchased for less than one-third of the price of new, but may be difficult to locate.

Used trailers for a wing keel or fin keel Catalina 22 are very difficult to find and rarely become available on the market.

How To Read a Catalina 22 Hull Identification Number

By Dale Mack

I have been curious about the relationship between the year a boat was built and its sail number. Using data collected from email passing through a Catalina 22 discussion group, I started a list. My goal for the list is to identify the sail numbers that represent the first and last boats built for each year. If you don't find your sail number on the list, it's because I think I already have sail numbers that bracket yours for that year.

As I collected data, I noticed some inconsistencies. It appears that what some people believe to be the age of their boat and its actual year of manufacture may not always be correct. Most of the data in the list hasn't been verified against actual hull identification numbers (HIN), so view the list with some skepticism unless there is a HIN entry. If you have something to add to the list, please drop me a line. By the way, I'm sure Catalina Yachts has a list, but I thought it would be more fun to build one from scratch without their assistance.

The Hull Identification Number

Boats built since 1972 are required to have a Hull Identification Number (HIN) permanently attached to the transom on the starboard side above the waterline. In 1984 a new regulation was passed which requires the HIN number to also be permanently attached in a second unexposed location. On my 1987 Catalina 22, the HIN was engraved into the transom after the hull had cured. The quality of the engraving is very poor and looks like it was done with an electric hand engraver.

Early Production Numbering

Frank Butler has been quoted as stating that in the beginning, fixed keel boats were numbered separately from the swing keel models, and that the fixed keel models should have a "K" at the side of the emblem on the stern plate. This separate numbering system was abandoned at the request of the Catalina 22 National Sailing Association officers at some point early in the manufacturing process. After that, all boats, regardless of keel, were numbered sequentially.

How to Read the Hull ID Number

There appears to be four numbering schemes in use. My dates for the transition from one scheme to the next might be off plus or minus a year, but I believe it looks something like this:

- 1969-1973, No HIN, just a metal plate at the transom (inside cockpit)
- 1973-1975, No letters for month built (e.g., CTYH44011074)
- 1975-1984, a mysterious "M" is a part of all HIN's (e.g.CTYH9353M80C)
- 1984-present, year built represented with a number (e.g., CTYH5390F697)

For the boating industry the new model year starts in August. Since 1975, the Month Built information has been represented with a letter. In 1984 the lettering scheme was changed to make "A" represent the month of January. Here's a look at the two schemes:
The Model Year scheme in use between 1975 and 1984 derived the Year Built information from the Model Year and from the Month Built. For example, a boat whose last three letters of the HIN were 82A would actually be a 1982 model year Catalina 22 built in August of 1981. Here's three HIN's decoded:

CTYH44011074: A Catalina 22 built in 1974. Sail number 4401.
CTY = Manufacturer's Identification Code (Catalina Yachts)
H = Model (Catalina 22)
4401 = Hull Serial Number
10 = Month Built
74 = Year Built

CTYH9353M80C: A 1980 model year Catalina 22. Built in October 1979. Sail number 9353.
CTY = Manufacturer's Identification Code (Catalina Yachts)
H = Model (Catalina 22)
9353 = Hull Serial Number
M = ???
80 = Model Year (1980). August is the start of a new model year.
C = Month Built (October). A=August, B=September, and so on.

CTYH5390F697: A 1997 model year Catalina 22. Built in June 1996. Sail number 15390.
CTY = Manufacturer's Identification Code (Catalina Yachts)
H = Model (Catalina 22)
5390 = Hull Serial Number
F = Month Built (June). A=January, B=February, and so on.
6 = Year Built (1996). Last digit of the year of manufacture.
97 = Model Year (1997).

Duplicate Hull Serial Numbers but Unique Sail Numbers

You may have noticed that only four digits are used for the hull serial number and yet we know that more than 15,000 Catalina 22's have been built (the remaining fields of the HIN uniquely identify the hull). If you have a boat built sometime after 1980 when Catalina 22 #10,000 was built, you simply add a one in front of your hull serial number to derive your sail number.

How Old Is Your Catalina 22?

The hull number of a Catalina 22 will reveal its age. The chart below provides a ball-park estimate of the age of a Catalina 22 based on its hull number. The hull number shown does not represent the first hull built for the associated model year.

Model Year	Hull Number
1970	1
1971	322
1972	804
1973	1912
1974	3144
1975	4680
1976	5679
1977	6646
1978	7976
1979	8270
1980	9247
1981	10208
1982	10531
1983	11935
1984	11999
1985	13142
1986	13143
1987	13827
1988	14371
1989	14802
1990	14943
1991	15195
1992	15248
1993	15286
1994	15340
1995	15348

Model Year	Hull Number
1996	15370
1997	15390
1998	15431
1999	15450
2000	15464
2001	15475
2002	15480
2003	15500
2004	15540
2005	15550
2006	15582
2007	15627
2008	15703
2009	15724
2011	15737
2012	15747
2013	15756
2017	15777
2018	15782
2020	15786
2021	15801
2023	15810
2025	15814

Other Helpful Catalina 22 Publications

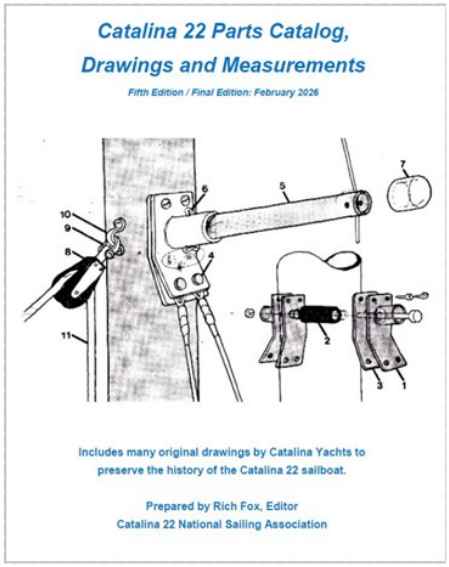

The ***Catalina 22 Parts Catalog, Drawings and Measurement*** publication is a very useful resource to help new owners better understand how a Catalina 22 is rigged and all the components.

Accessible at www.catalina22.org, this publication is available only to members of the Catalina 22 National Sailing Association.

With over 700 pages of content, the ***Catalina 22 Technical Manual and Updates*** is the “must-have” resource for all Catalina 22 owners. Available in PDF format for easy viewing, all articles were written by Catalina 22 owners with decades of experience for Catalina 22 owners.

The ***Catalina 22 Technical Manual and Updates*** is only available to members of the Catalina 22 National Sailing Association for an additional purchase. You can spend days or weeks searching the internet for useful Catalina 22 information, or join the Catalina 22 National Sailing Association and have it at your fingertips with this publication!